91104 90127D

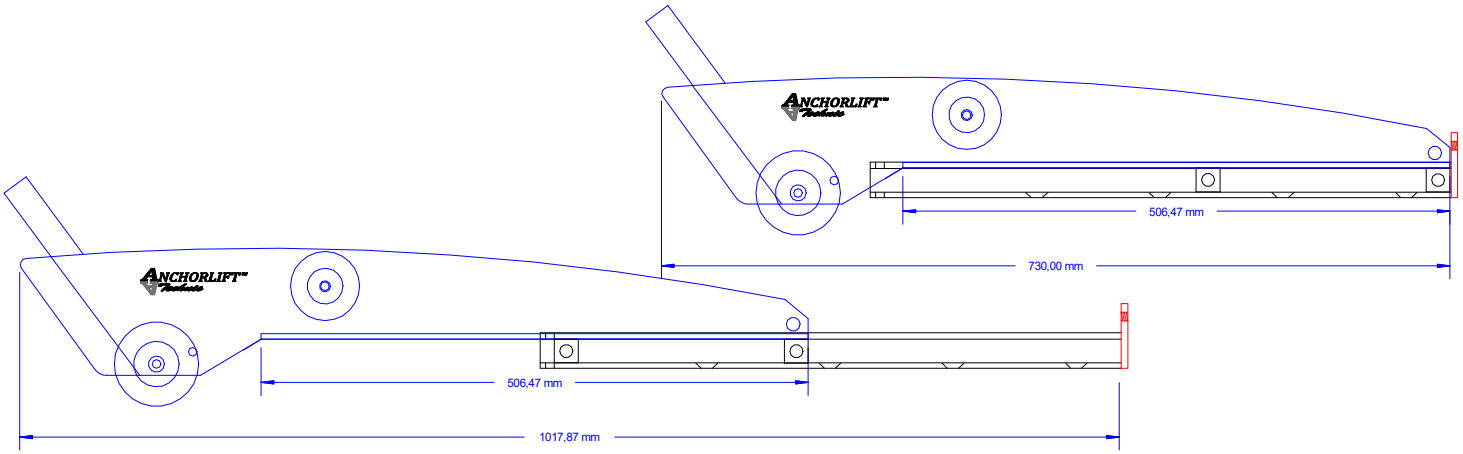

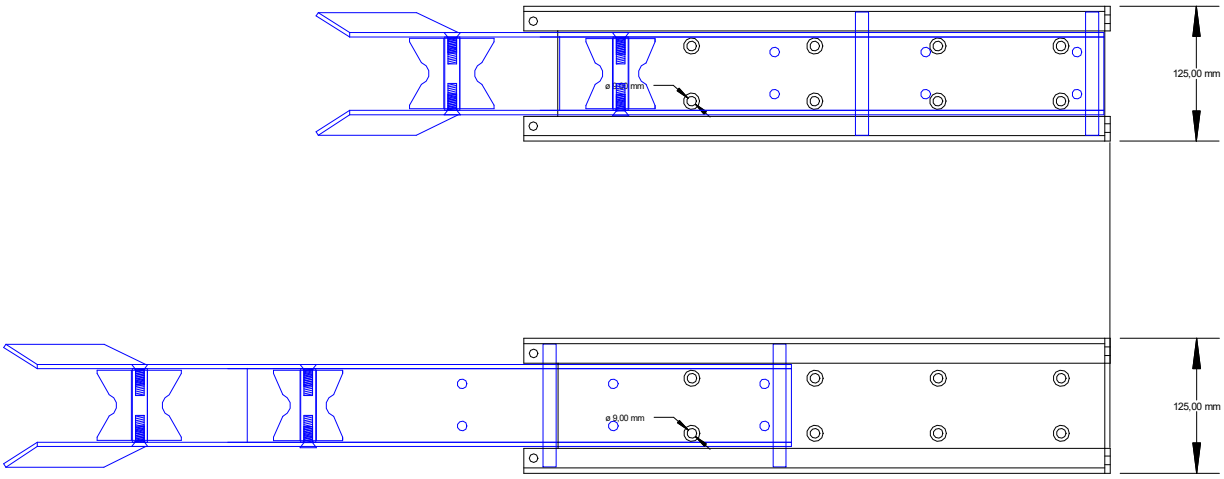

02 10 2016 Anchorlift Technic